TRITORC

PIPELINE SOLUTIONS

BOLTING SOLUTIONS

TRITORC
PIPELINE SOLUTIONS

TRITORC - THE BOLTING EXPERT

As an O.E.M manufacturer for all things bolting, we are constantly improving to engineer the finest products on the market.

TRITORC products are calibrated and certified in-house with our calibration facility that ensures up to date testing of our final products. Our R&D experts provide constant input to improve the design of our extensively used tools. We are confident that our bolting equipment can tackle every issue our clients face, to their complete satisfaction. TRITORC products are known for their superior quality, durability, reliability and flawless finish.

"We bring Perfection and Innovation to the next level."

Currently serving USA, Europe, Africa, Middle East and Southeast Asia, we are always extending our reach to wherever we can provide!

INDUSTRY SECTORS THAT WE SERVE:

- → Petrochemicals & Refineries
- → Oil Exploration
- → Power Stations
- → Wind Power
- → Chemical Industries
- → Mines & more

Backed by a team of experts that is proficient in providing the best technical support. Tritorc Inc raises the bar by providing exceptional Sales and Service.

TRITORC also provides Rental Fleets built to support all of your bolting needs.

"Bolting is a Passion at TRITORC"

TRITORC
PIPELINE SOLUTIONS

CONTENT

HYDRAULIC TORQUE WRENCHES SQUARE DRIVE 01
HYDRAULIC TORQUE WRENCHES HEX DRIVE 03
THL LINK SELECTION 05
ACCESSORIES FOR HYDRAULIC TORQUE WRENCH 06
LOW PROFILE HYDRAULIC TORQUE WRENCH (ULTRA SLIM) 07
TRITORC ELECTRIC POWER PACK 09
HYDRAULIC TORQUEING POWER PACK (TWP-3) 10
ATEX CERTIFIED ELECTRIC PUMP 10
SL SERIES ELECTRIC SHEAR WRENCH 11
ET SERIES ELECTRIC TORQUE WRENCH 12
BATTERY TORQUE WRENCH TBTW SERIES 13
TOP-SIDE BOLT TENSIONER (BTL SERIES) 14
SPRING RETURN HYDRAULIC BOLT TENSIONER SLT SERIES 15
MULTI-STAGE HYDRAULIC BOLT TENSIONER (MST SERIES) 16
SUB-SEA HYDRAULIC BOLT TENSIONER 17
WIND TURBINE FOUNDATION BOLT TENSIONER WBT SERIES 17
AIR OPERATED HYDRAULIC POWER PACK FOR TENSIONERS 18
HAND PUMPS FOR BOLT TENSIONERS MODEL: BPL-15 18
MANUAL TORQUE WRENCHES 19
MANUAL TORQUE MULTIPLIER 19
TRITORC FLANGE SPREADERS HYDRAULIC VERTICAL LIFTING WEDGE HVWL-10 20
HYDRAULIC SPREADING WEDGE HSWL-10 20
TRITORC LIGHT WEIGHT NUT SPLITTER 21
FLANGE SIZE 22
TORQUE SPECIFICATIONS 23

HYDRAULIC TORQUE WRENCHES SQUARE DRIVE

Hydraulic Torque Wrenches are the work horse of the bolting world, in stock with proven performance, our wrenches have a wide variety of applications.

SPECIFICATIONS:

- Available torque ranges up to 50,000 Ft. Lbs. with maximum operating pressure of 10000 PSI (700 bar).
- TRITORC Hydraulic Torque Wrenches maintain an accuracy of ± 3% while torquing.

TRITORC manufactures simple, faster, efficient and reliable Hydraulic Torque Wrenches that are user friendly.

Benefits are -

- Provision for lifting tools / handle.
- Standard spline design with torque effective length for exact PCD engagement of reaction arm.
- High strength aerospace aluminium material for light weight and stronger body design with heat treated components.
- Scratch proof hard anodized body and reaction arm.
- High pressure seal design.
- Quick push through drive for ease of loosening and tightening.
- Industries that this tool finds utility in includes Oil and Gas, Refineries, Pipelines, Power Generation, Boiler Industry, Turbines and many more.

TECHNICAL DATA

		TSL-07	TSL-1	TSL-3	TSL-5	TSL-8	TSL-10	TSL-15	TSL-20	TSL-25	TSL-35	TSL-50
	Sq. Dr.	3/4"	3/4"	1"	1.1/2"	1.1/2"	1.1/2"	2.1/2"	2.1/2"	2.1/2"	2.1/2"	2.1/2"
Min. Torque	Nm	112	183	450	737	1078	1551	2176	3045	3472	4866	6925
	Ft. Lbs	81	134	328	536	783	1054	1581	2212	2523	3535	5030
Max Torque	Nm	1120	1837	4500	7379	10780	15519	22505	30461	34725	48666	69247
	Ft. Lbs	814	1340	3280	5360	7830	10540	15807	22120	25230	35350	50300
Tool Weight	Kg	1.8	2.5	4.9	9.5	10.8	14.7	23	26	35	50	65
	Lbs	4	5.5	10.8	20.9	23.8	32.4	50.7	57.3	77.2	110.3	143.3

Note: Dimensions are subject to change.

01) Quick push through drive for ease of loosening and tightening.
02) Fine Ratchet and Pawl for better engagement.
03) Multi tooth drive segment ensures and engagement upto 32°.
04) Balanced drive Rod - Side load free piston movement.
05) Laser engraved torque chart in (Nm & ft lbs).
06) Hard chrome plating on piston rod ensures better wear resistance of rod seal.
07) Self lubricating low Nickel Bronze drive bush protects the body from wear.
08) 360° x 180° swivel for Hydraulic Couplers offer better degree of movement.
09) Leak proof quick connect couplers for easy and safe operation.
10) End-cap design for sufficient back pressure for smooth piston forward force.
11) Rigid reaction arm suitable for heavy load application.
12) Simple design reaction arm release button for ease of operations.
13) Alloy Steel reaction boot (Available in multi-color option).
14) Cold worked cylinder bore for longer life and super finish for long working conditions.

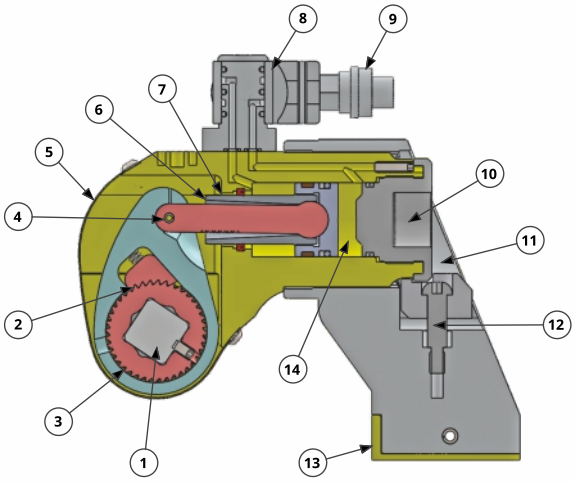

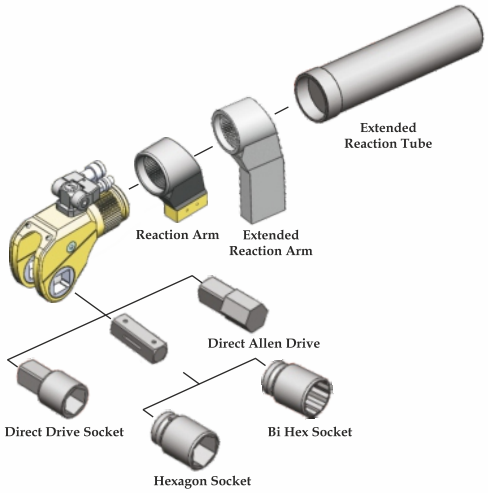

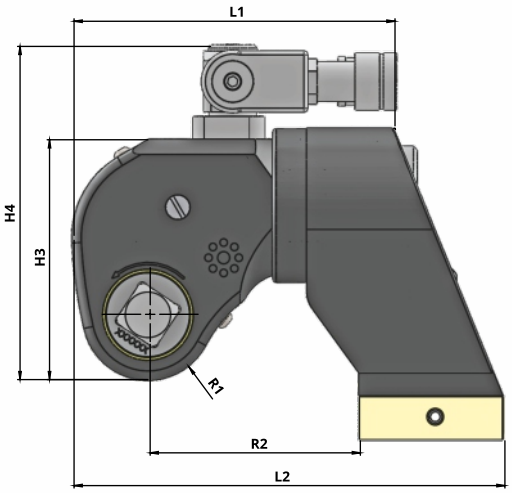

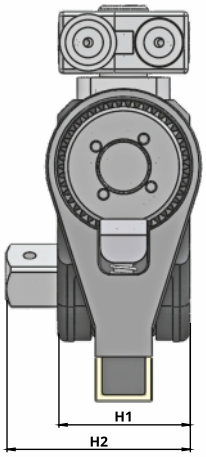

DIMENSIONAL DATA

	TSL-07	TSL-1	TSL-3	TSL-5	TSL-8	TSL-10	TSL-15	TSL-20	TSL-25	TSL-35	TSL-50
Body Length (L1) mm (inch)	117 4.61	143 5.63	178 7.01	213 8.39	226 8.90	246 9.69	272 10.71	309 12.17	325 12.80	372 14.65	387 15.24
Overall Length (L2) mm (inch)	139 5.47	171 6.73	228 8.98	275 10.83	292 11.50	317 12.48	352 13.86	387 15.24	402 15.83	466 18.35	518 20.39
Tool Width (H1) mm (inch)	42 1.65	52 2.05	69.5 2.74	82.5 3.25	84 3.31	102 4.02	111 4.37	128 5.04	136.5 5.37	153 6.02	167.5 6.59
Overall Width (H2) mm (inch)	67 2.64	75 2.95	97 3.82	122 4.80	132 5.20	141 5.55	185 7.28	203 7.99	207 8.15	226 8.90	239 9.41
Tool Height (H3) mm (inch)	80 3.15	96 3.78	127 5.00	149 5.87	168 6.61	182 7.17	197 7.76	213 8.39	252 9.92	283 11.14	301 11.85
Overall Height (H4) mm (inch)	117 4.61	133 5.24	177 6.97	199 7.83	218 8.58	232 9.13	247 9.72	262 10.31	301 11.85	333 13.11	351 13.82
Tool Radius (R1) mm (inch)	21.5 0.85	26.3 1.04	34.5 1.36	39 1.54	47 1.85	51 2.01	57.5 2.26	59 2.32	66 2.60	77.5 3.05	80.5 3.17
Reaction Reach (R2) mm (inch)	67 2.64	84 3.31	111 4.37	140 5.51	148 5.83	153 6.02	170 6.69	187 7.36	202 7.95	241 9.49	258 10.16

Note: Dimensions are subject to change.

HYDRAULIC TORQUE WRENCHES HEX DRIVE

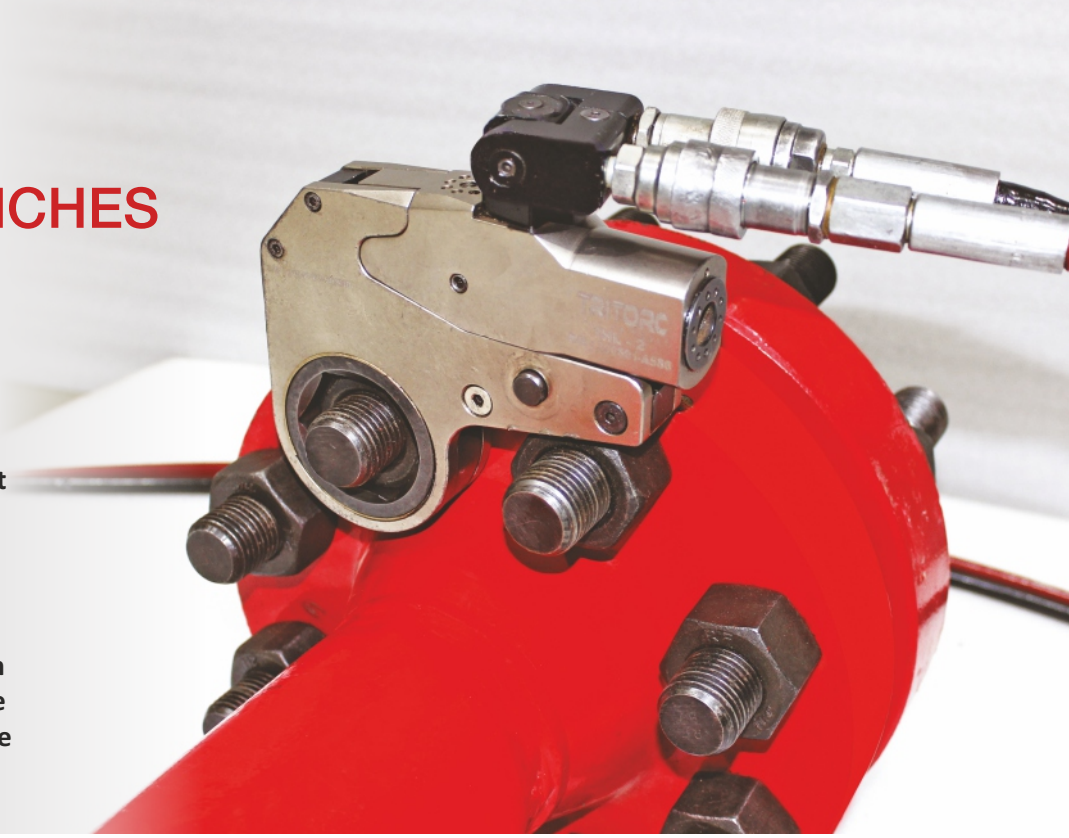

TRITORC THL Series Direct Hex Drive Hydraulic Torque Wrenches are designed for extreme tight spaces where normal tools cannot reach.

The light weight and compact hydraulic cylinder is made of high strength alloy steel. There are 5 Models in THL Series ranging from 200 - 35000 ft lbs. All models have small nose radius which allows the tool to fit in constraint spaces.

SPECIFICATIONS:

- The rod engages in the first stroke thus removing any backlash.
- The ratchet and pawl have a finer tooth for better engagement and torqueing.
- The quick connectors for the hydraulic lines are leak-resistant for safety even under pressure.

TECHNICAL DATA

Technical Data	Units	THL-2		THL-4		THL-8		THL-14		THL-32	
Min. Torque	Nm	273	295	607	677	1228	1589	2162	2440	5026	5351
	Ft. Lbs	198	214	441	492	892	1154	1571	1773	3651	3887
Max. Torque	Nm	2728	2952	6069	6773	12281	15890	21620	24399	50258	53512
	Ft. Lbs	1983	2142	4409	4918	8921	11543	15706	17725	36511	38872
Hex Across Flat	mm	19 - 48	49 - 60	33 - 56	57 - 80	41 - 80	81 - 105	50 - 100	101 - 120	90 - 145	146 - 175
	Inch	3/4 - 1.7/8	1.15/16 - 2.3/8	1.5/16 - 2.3/16	2.1/4 - 3.1/8	1.5/8 - 3.1/8	3.3/16 - 4.1/8	2 - 3.7/8	3.15/16 - 4.3/4	3.7/8 - 5.11/16	5.3/4 - 6.7/8
Drive Unit Weight	Kg	1.5	1.5	3.2	3.2	5.3	5.3	9.8	9.8	15	15
	Lbs.	3.3	3.3	7.1	7.1	11.7	11.7	21.6	21.6	33.1	33.1
Ratchet Unit Weight	Kg	1.7	1.85	4.1	4.2	8.7	8.8	11.5	15.5	32	35
	Lbs.	3.7	4.1	9	9.3	19.2	19.4	25.4	34.2	70.6	77.2

Note: Dimensions are subject to change.

1) Self-lubricating low Nickel Bronze for drive bush to protect body from use.
2) Fine Ratchet and Pawl for better engagement.
3) Auto engagement of rod in first stroke
4) Leak proof quick connecting coupler.
5) 360°x180° swivel for better degree of movement.
6) Hard chrome plating of piston rod for wear resistance.
7) High quality seals for high pressure.
8) Torsion free reaction pad.
9) Never-Lock drive pawl.
10) Lock Pin.

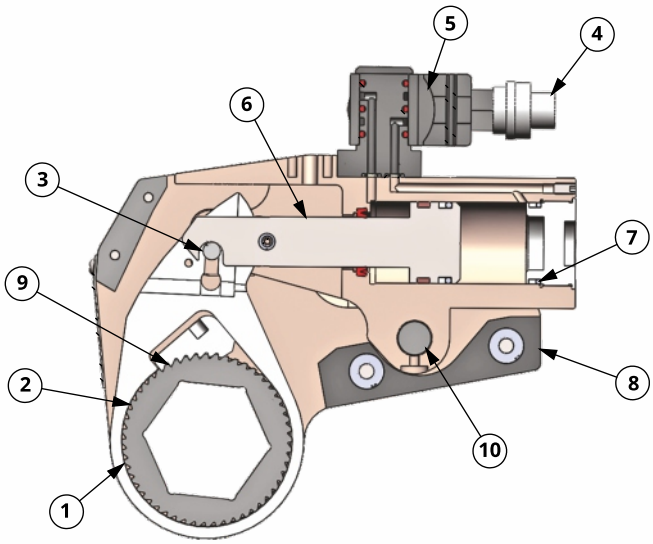

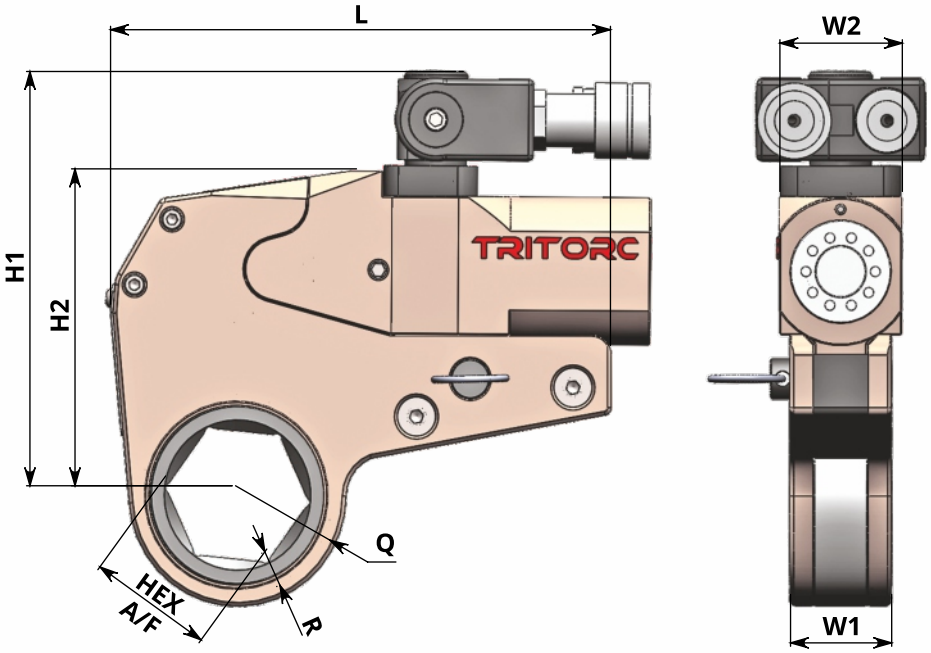

DIMENSIONAL DATA

Technical Data	THL-2		THL-4		THL-8		THL-14		THL-32	
Overall Length L mm (inch)	164 6.46	169 6.65	202 7.95	218 8.58	267 10.51	285 11.22	325 12.80	329 12.95	408 16.06	443 17.44
H1 mm (inch)	132 5.20	143 5.63	168 6.61	184 7.24	198 7.80	223 8.78	237 9.33	251 9.88	299 11.77	321 12.64
H2 mm (inch)	99 3.90	110 4.33	129 5.08	144 5.67	159 6.26	184 7.24	193 7.60	209 8.23	259 10.20	281 11.06
W1 mm (inch)	32.2 1.27	32.2 1.27	40.6 1.60	40.6 1.60	52.5 2.07	52.5 2.07	63 2.48	63 2.48	83 3.27	83 3.27
W2 mm (inch)	34.4 1.35	34.4 1.35	49.5 1.95	49.5 1.95	61.5 2.42	61.5 2.42	81 3.19	81 3.19	93 3.66	93 3.66
(Q) Nose Radius mm (inch)	22 - 43 0.87-1.69	43 - 46 1.69-1.81	33 - 46 1.30-1.81	46 - 60 1.81-2.36	42 - 63 1.65-2.48	63 - 81 2.48-3.19	53 - 80 2.09-3.15	80 - 92 3.15-3.62	90 - 114 3.54-4.49	114 - 128 4.49-5.04
R min mm (inch)	9.5 0.37	10 0.39	10 0.39	13 0.51	12 0.47	20 0.79	17 0.67	22 0.87	25 0.98	25 0.98
R max mm (inch)	14.5 0.57	15.5 0.61	15 0.59	18 0.71	20 0.79	24 0.94	27 1.06	29 1.14	31 1.22	31 1.22

Note: Dimensions are subject to change.

THL LINK SELECTION

- Compact design with longer arm improves the reliability and application of our THL.
- More accurate and easier to use, since the wrench directly operates on the nuts.
- 360x160 degree swivel or 360x360 degree swivel allows the wrench to operate freely in confined areas.

THL-2 Link	Hex Size		THL-4 Link	Hex Size		THL-8 Link	Hex Size		THL-14 Link	Hex Size		THL-32 Link	Hex Size	
	Inch	mm		Inch	mm		Inch	mm		Inch	mm		Inch	mm
HL-2-19	3/4	19	HL-4-33	1-5/16		HL-8-41	1-5/8	41	HL-14-50		50	HL-32-108	4-1/4	
HL-2-20	13/16		HL-4-34		34	HL-8-42	1-11/16		HL-14-51	2		HL-32-109	4-5/16	
HL-2-21		21	HL-4-35	1-3/8		HL-8-44	1-3/4		HL-14-52	2-1/16		HL-32-110		110
HL-2-22	7/8	22	HL-4-36		36	HL-8-46	1-13/16	46	HL-14-53	2-1/8		HL-32-111	4-3/8	
HL-2-23	15/16		HL-4-37	1-7/16		HL-8-47	1-7/8		HL-14-55	2-3/16	55	HL-32-112	4-7/16	
HL-2-24		24	HL-4-38	1-1/2	38	HL-8-49	1-15/16	49	HL-14-57	2-1/4		HL-32-114	4-1/2	
HL-2-25	1		HL-4-39	1-9/16		HL-8-50		50	HL-14-58	2-5/16		HL-32-115		115
HL-2-27	1-1/16	27	HL-4-41	1-5/8	41	HL-8-51	2		HL-14-60	2-3/8	60	HL-32-116	4-9/16	
HL-2-28	1-1/8		HL-4-42	1-11/16		HL-8-52	2-1/16		HL-14-62	2-7/16		HL-32-117	4-5/8	117
HL-2-30	1-3/16	30	HL-4-44	1-3/4		HL-8-54	2-1/8		HL-14-63	2-1/2		HL-32-119	4-11/16	
HL-2-31	1-1/4"		HL-4-46	1-13/16	46	HL-8-55	2-3/16	55	HL-14-65	2-9/16	65	HL-32-120		120
HL-2-32		32	HL-4-47	1-7/8		HL-8-57	2-1/4		HL-14-66	2-5/8		HL-32-121	4-3/4	
HL-2-33	1-5/16		HL-4-49	1-15/16	49	HL-8-58	2-5/16		HL-14-68	2-11/16		HL-32-122	4-13/16	
HL-2-34		34	HL-4-50		50	HL-8-60	2-3/8	60	HL-14-70	2-3/4	70	HL-32-123	4-7/8	
HL-2-35	1-3/8	35	HL-4-51	2		HL-8-61	2-7/16		HL-14-71	2-13/16		HL-32-125		125
HL-2-36		36	HL-4-52	2-1/16		HL-8-63	2-1/2		HL-14-73	2-7/8		HL-32-126	4-15/16	
HL-2-37	1-7/16		HL-4-53	2-1/8		HL-8-65	2-9/16	65	HL-14-75	2-15/16	75	HL-32-127	5	127
HL-2-38	1-1/2	38	HL-4-55	2-3/16	55	HL-8-66	2-5/8		HL-14-76	3		HL-32-128	5-1/16	
HL-2-39	1-9/16		HL-4-57	2-1/4		HL-8-68	2-11/16		HL-14-77	3-1/16		HL-32-130	5-1/8	
HL-2-41	1-5/8	41	HL-4-58	2-5/16		HL-8-70	2-3/4	70	HL-14-79	3-1/8		HL-32-131	5-3/16	
HL-242	1-11/16		HL-4-60	2-3/8"	60	HL-8-71	2-13/16		HL-14-80		80	HL-32-133	5-1/4	
HL-2-44	1-3/4		HL-4-61	2-7/16		HL-8-73	2-7/8		HL-14-81	3-3/16		HL-32-134	5-5/16	135
HL-2-46	1-13/16	46	HL-4-63	2-1/2		HL-8-75	2-15/16	75	HL-14-82	3-1/4		HL-32-136	5-3/8	
HL-2-47	1-7/8		HL-4-65	2-9/16	65	HL-8-76	3		HL-14-84	3-5/16		HL-32-138	5-7/16	
HL-2-49	1-15/16	49	HL-4-66	2-5/8		HL-8-77	3-1/16		HL-14-85		85	HL-32-140	5-1/2	140
HL-2-50		50	HL-4-68	2-11/16		HL-8-79	3-1/8		HL-14-86	3-3/8		HL-32-141	5-9/16	
HL-2-51	2		HL-4-70	2-3/4	70	HL-8-80		80	HL-14-87	3-7/16		HL-32-142	5-5/8	
HL-2-52	2-1/16		HL-4-71	2-13/16		HL-8-81	3-3/16		HL-14-89	3-1/2		HL-32-144	5-11/16	
HL-2-54	2-1/8		HL-4-73	2-7/8		HL-8-82	3-1/4		HL-14-90		90	HL-32-145		145
HL-2-55	2-3/16	55	HL-4-75	2-15/16	75	HL-8-84	3-5/16		HL-14-91	3-9/16		HL-32-146	5-3/4	
HL-2-57	2-1/4		HL-4-76	3		HL-8-85		85	HL-14-92	3-5/8		HL-32-147	5-13/16	
HL-2-59	2-5/16		HL-4-77	3-1/16		HL-8-86	3-3/8		HL-14-93	3-11/16		HL-32-149	5-7/8	
HL-2-60	2-3/8	60	HL-4-79	3-1/8		HL-8-87	3-7/16		HL-14-95	3-3/4	95	HL-32-150		150
			HL-4-80		80	HL-8-88	3-1/2		HL-14-96	3-13/16		HL-32-151	5-15/16	
						HL-8-90		90	HL-14-98	3-7/8		HL-32-152	6	
						HL-8-91	3-9/16		HL-14-100	3-15/16	100	HL-32-153	6-1/16	
						HL-8-92	3-5/8		HL-14-101	4		HL-32-155		155
						HL-8-93	3-11/16		HL-14-104	4-1/6		HL-32-156	6-1/8	
						HL-8-95	3-3/4	95	HL-14-105	4-1/8	105	HL-32-157	6-3/16	
						HL-8-96	3-13/16		HL-14-106	4-3/16		HL-32-158	6-1/4	
						HL-8-98	3-7/8		HL-14-107	4-1/4		HL-32-160		160
						HL-8-100	3-15/16	100	HL-14-109	4-5/16		HL-32-161	6-5/16	
						HL-8-101	4		HL-14-110		110	HL-32-162	6-3/8	
						HL-8-103	4-1/16		HL-14-111	4-3/8		HL-32-163	6-7/16	
						HL-8-105	4-1/8	105	HL-14-112	4-7/16		HL-32-165	6-1/2	165
									HL-14-114	4-1/2		HL-32-166	6-9/16	
									HL-14-115		115	HL-32-168	6-5/8	
									HL-14-117		117	HL-32-170	6-11/16	170
												HL-32-171	6-3/4	
												HL-32-173	6-13/16	
												HL-32-174	6-7/8	
												HL-32-175		175

ACCESSORIES

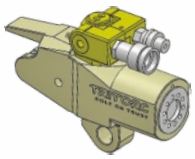

THL Cylinder

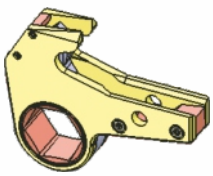

Ratchet Link

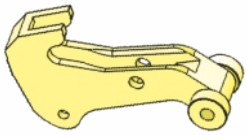

Spanner Holder

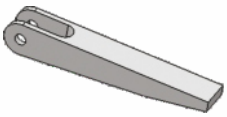

Extended Reaction Arm

Hex Reducer

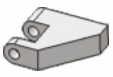

Low Point Reaction Pad

Stack Socket

Hex to Square Drive Adapter

Open End Head

Ring Type Head

ACCESSORIES FOR HYDRAULIC TORQUE WRENCH

HEAVY DUTY IMPACT SOCKETS:

Our heavy impact sockets range from 3/4" to 2 1/2" in square drive and the across flat sizes go up to 6 7/8". We also provide Metric sizes which range up to 185mm.

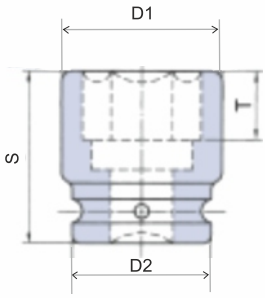

6 POINTS IMPACT SOCKETS

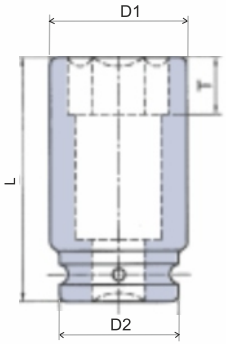

Model No.	Square Drive	Nut A/F		D1	D2	S	T	L
		inch	mm					
TI424	3/4"	-	24	40	44	46	21	90
TI427	3/4"	-	27	41	44	48	23	90
TI427F	3/4"	1.1/16	-	41	44	48	23	90
TI430	3/4"	-	30	44	44	52	24	90
TI431F	3/4"	1.1/4	-	49	44	52	24	90
TI432	3/4"	-	32	49	44	52	26	90
TI436	3/4"	-	36	52	44	55	28	90
TI436F	3/4"	1.7/16	-	52	44	56	28	90
TI441	3/4"	-	41	57	44	59	36	90
TI441F	3/4"	1.5/8	-	57	44	59	36	90
TI446	3/4"	-	46	67	44	64	37	90
TI446F	3/4"	1.13/16	-	67	44	64	36	90
TI450	3/4"	-	50	70	54	67	39	90
TI451F	3/4"	2	-	73	54	67	39	90
TI455	3/4"	-	55	78	54	71	41	94
TI455F	3/4"	2.3/16	-	78	54	71	41	94
TI460	3/4"	-	60	82	52	75	45	98
TI460F	3/4"	2.3/8	-	82	54	75	45	98
TI524	1"	-	24	42	54	55	21	100
TI527	1"	-	27	46	54	55	23	100
TI527F	1"	1.1/16	-	46	54	55	23	100
TI530	1"	-	30	50	54	57	24	100
TI531F	1"	1.1/4	-	51	54	57	24	100
TI532	1"	-	32	51	54	57	26	100
TI536	1"	-	36	54	54	60	28	100
TI536F	1"	1.7/16	-	54	54	60	28	100
TI541	1"	-	41	63	54	64	36	100
TI541F	1"	1.5/8	-	63	54	64	36	100
TI546	1"	-	46	70	54	69	36	100
TI546F	1"	1.13/16	-	70	54	69	36	100
TI550	1"	-	50	73	54	72	36	100
TI551F	1"	2	-	73	54	72	39	100
TI555	1"	-	55	82	54	76	41	105
TI555F	1"	2.3/16	-	82	54	80	41	105
TI560	1"	-	60	86	54	82	45	112
TI560F	1"	2.3/8	-	88	54	85	45	112
TI565	1"	-	65	92	54	85	46	118
TI565F	1"	2.9/16	-	92	54	85	46	118
TI570	1"	-	70	96	54	88	50	124
TI570F	1"	2.3/4	-	96	54	88	50	124
TI575	1"	-	75	100	86	92	57	124
TI575F	1"	2.15/16	-	100	86	92	57	124
TI579F	1"	3.1/8"	-	105	86	97	57	132
TI580	1"	-	80	105	86	97	62	132
TI585	1"	-	85	115	86	100	62	132
TI588F	1"	3.1/2"	-	121	86	104	62	140
TI590	1"	-	90	127	86	104	62	140
TI595	1"	-	95	135	86	106	62	140
TI597F	1"	3.7/8"	-	135	86	112	62	143

Model No.	Square Drive	Nut A/F		D1	D2	S	T	L
		inch	mm					
TI5100	1"	-	100	135	86	112	62	143
TI636	1.1/2"	-	36	64	86	80	28	130
TI641	1.1/2"	-	41	69	86	83	32	130
TI646	1.1/2"	-	46	76	86	86	36	130
TI646F	1.1/2"	1.13/16	-	76	86	86	36	130
TI650	1.1/2"	-	50	81	86	90	39	130
TI651F	1.1/2"	2	-	81	86	90	39	130
TI655	1.1/2"	-	55	88	86	95	41	140
TI655F	1.1/2"	2.3/16	-	88	86	95	41	140
TI660	1.1/2"	-	60	96	86	98	45	140
TI660F	1.1/2"	2.3/8	-	96	86	98	45	140
TI665	1.1/2"	-	65	102	86	102	46	140
TI665F	1.1/2"	2.9/16	-	102	86	102	46	140
TI670	1.1/2"	-	70	108	86	102	50	150
TI670F	1.1/2"	2.3/4	-	108	86	102	50	150
TI675	1.1/2"	-	75	116	86	108	57	150
TI675F	1.1/2"	2.15/16	-	116	86	108	57	150
TI680	1.1/2"	-	80	120	86	110	62	150
TI680F	1.1/2"	3.1/8	-	120	86	110	62	150
Ti685	1.1/2"	-	85	130	86	115	62	170
TI690	1.1/2"	-	90	135	125	118	65	170
TI690F	1.1/2"	3.1/2	-	135	125	118	65	170
TI695	1.1/2"	-	95	140	125	123	70	170
TI6100	1.1/2"	-	100	148	125	128	75	190
TI6100F	1.1/2"	3.7/8	-	148	125	128	75	190
TI6105	1.1/2"	-	105	155	125	133	80	190
TI6106F	1.1/2"	4.1/4	-	155	125	133	80	190
TI6110	1.1/2"	-	110	161	150	138	85	200
TI6115	1.1/2"	-	115	161	150	143	94	200
TI6120F	1.1/2"	4.5/8	-	175	150	149	94	200
TI780	2.1/2"	-	80	135	125	140	62	190
TI780F	2.1/2"	3.1/8	-	135	125	140	62	190
TI785	2.1/2"	-	85	140	125	140	62	190
TI790	2.1/2"	-	90	145	125	140	65	190
TI795	2.1/2"	-	95	155	125	150	70	190
TI796F	2.1/2"	3.7/8	-	155	125	150	70	190
TI7100	2.1/2"	-	100	160	125	150	75	200
TI7105	2.1/2"	-	105	165	125	160	80	200
TI7110	2.1/2"	-	110	174	150	160	85	210
Ti7115	2.1/2"	-	115	180	150	170	90	210
TI7115F	2.1/2"	4.1/2	-	180	150	170	90	210
TI7125F	2.1/2"	5	-	195	150	175	98	220
TI7130	2.1/2"	-	130	195	150	175	98	220
TI7135F	2.1/2"	5.3/8	-	205	150	180	102	220
TI7145	2.1/2"	-	145	220	150	180	105	230
TI7145F	2.1/2"	5.3/4	-	220	150	180	105	230
TI7155F	2.1/2"	6.1/8	-	230	180	190	110	250
TI7165F	2.1/2"	6.1/2	-	240	180	200	120	-
TI7175F	2.1/2"	6.7/8	-	255	180	200	120	-

LOW PROFILE HYDRAULIC TORQUE WRENCH (ULTRA SLIM)

TRITORC offers a series of Low-Profile Torque Wrenches which are crucial for applications in constricted spaces like Christmas Trees on BOP. A High-Performance Steel Alloy used for several components including, the Housing. This keeps the tool light, compact and strong.

SPECIFICATIONS:

- 360°×180° swivel for better degree of movement.
- Self-lubricating low Nickel Bronze for drive bush to protect body from wear.
- The reduced dimensions allow the tool to fit into tight spaces easily.

MODEL	HEX A/F				Min Torque	Max Torque	Tool Weight Kg.
	mm	mm	Inch	Inch	N.m	N.m	
HSL-2	19	60	7/8"	2.3/8"	293	3051	2.70
HSL-4	46	80	1.13/16"	3.1/8"	608	6733	6.30
HSL-8	60	90	2.3/8"	3.1/2"	1192	12834	11.60

HSL
LINK SELECTION

THL-2 Link	Hex Size		THL-4 Link	Hex Size		THL-8 Link	Hex Size	
	Inch	mm		Inch	mm		Inch	mm
HSL-2-19		19	HSL-4-46		46	HSL-8-60		60
HSL-2-22		22	HSL-4-46F	1-13/16"		HSL-8-60F	2.3-8"	
HSL-2-22F	7/8"		HSL-4-50		50	HSL-8-63F	2-1/ 2"	
HSL-2-24		24	HSL-4-50F	2"		HSL-8-65		65
HSL-2-25F	1"		HSL-4-55		55	HSL-8-65F	2-9/16"	
HSL-2-27		27	HSL-4-55F	2.3-16"		HSL-8-66F	2-5/8"	
HSL-2-27F	1.1/16"		HSL-4-60		60	HSL-8-68F	2-11/16"	
HSL-2-30		30	HSL-4-60F	2.3-8"		HSL-8-69F	2-3/4"	
HSL-2-30F	1.3/16"		HSL-4-63F	2-1/ 2"		HSL-8-70		70
HSL-2-31F	1-1/4"		HSL-4-65		65	HSL-8-71F	2-13/16"	
HSL-2-32		32	HSL-4-65F	2-9/16"		HSL-8-73F	2-7/8"	
HSL-2-33F	1-5/16"		HSL-4-66F	2-5/8"		HSL-8-74F	2-15/16"	
HSL-2-34		34	HSL-4-68F	2-11/16"		HSL-8-75		75
HSL-2-34F	1-3/8"		HSL-4-69F	2-3/4"		HSL-8-76F	3"	
HSL-2-35		35	HSL-4-70		70	HSL-8-77F	3-1/16"	
HSL-2-36		36	HSL-4-71F	2-13/16"		HSL-8-79F	3-1/8"	
HSL-2-36F	1-7/16"		HSL-4-73F	2-7/8"		HSL-8-80		80
HSL-2-38		38	HSL-4-74F	2-15/16"		HSL-8-80F	3-3/16"	
HSL-2-38F	1-1/ 2"		HSL-4-75		75	HSL-8-82F	3-1/4"	
HSL-2-39F	1-9/16"		HSL-4-76F	3"		HSL-8-84F	3-5/16"	
HSL-2-41		41	HSL-4-77F	3-1/16"		HSL-8-85		85
HSL-2-41F	1-5/8"		HSL-4-79F	3-1/8"		HSL-8-85F	3-3/8"	
HSL-2-42F	1-11/16"		HSL-4-80		80	HSL-8-87F	3-7/16"	
HSL-2-44F	1-3/4"					HSL-8-88F	3-1/2"	
HSL-2-46		46				HSL-8-90		90
HSL-2-46F	1-13/16"							
HSL-2-50		50						
HSL-2-50F	2"							
HSL-2-55		55						
HSL-2-55F	2.3-16"							
HSL-2-60		60						
HSL-2-60F	2.3-8"							

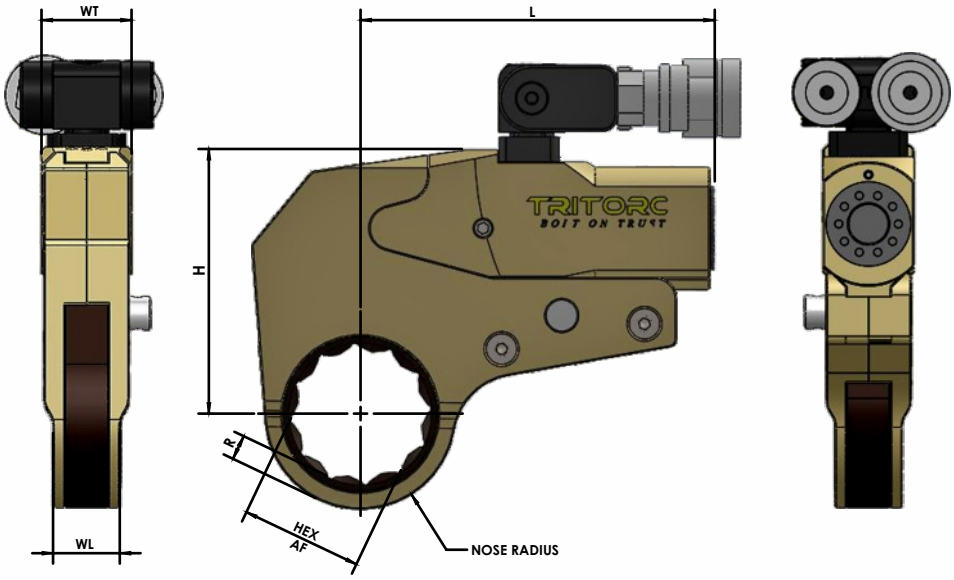

Power Head		Torque Range		Hex Size	L	H	WL	WT	R
		Min	Max	mm (inch)	mm (inch)	mm (inch)	mm (inch)	mm (inch)	(Nose Width)
THL-2	Ft.Lbs Nm	214 293	2217 3051	36.51 (1-7/16)	135 (5.31)	101 (3.97)	25.5 (1.00)	34.4 (1.35)	8.9 (0.35)
				31.75 (1-1/4)	135 (5.31)	101 (3.97)	25.5 (1.00)	34.4 (1.35)	8.9 (0.35)
				46.03 (1-13/16)	135 (5.31)	101 (3.97)	25.5 (1.00)	34.4 (1.35)	8.9 (0.35)
				41.28 (1-5/8)	135 (5.31)	135 (5.31)	25.5 (1.00)	34.4 (1.35)	8.9 (0.35)
				50.8 (2)	139 (5.47)	104 (4.09)	25.5 (1.00)	34.4 (1.35)	8.9 (0.35)
				55.58 (2-3/16)	137 (5.39)	110 (4.33)	25.5 (1.00)	34.4 (1.35)	8.9 (0.35)
				60.33 (2-3/8)	137 (5.39)	111 (4.37)	25.5 (1.00)	34.4 (1.35)	8.9 (0.35)
THL-4	Ft.Lbs Nm	443 608	4891 6733	65.1 (2-9/16)	174 (6.85)	142 (5.59)	28.7 (1.13)	49.5 (1.95)	10.5 (0.41)
				69.85 (2-3/4)	176 (6.93)	142 (5.59)	28.7 (1.13)	49.5 (1.95)	10.5 (0.41)
				74.63 (2-15/16)	176 (6.93)	142 (5.59)	28.7 (1.13)	49.5 (1.95)	10.5 (0.41)
THL-8	Ft.Lbs Nm	867 1192	9323 12834	53.98 (2-1/8)	216 (8.50)	154 (6.06)	38 (1.49)	61.5 (2.42)	13.35 (0.53)
				79.38 (3-1/8)	216 (8.50)	154 (6.06)	38 (1.49)	61.5 (2.42)	14.45 (0.57)

Note: Dimensions are subject to change. For Higher Torque Values we can provide you with Customized Solutions.

TRITORC ELECTRIC POWER PACK FULLY AUTOMATIC

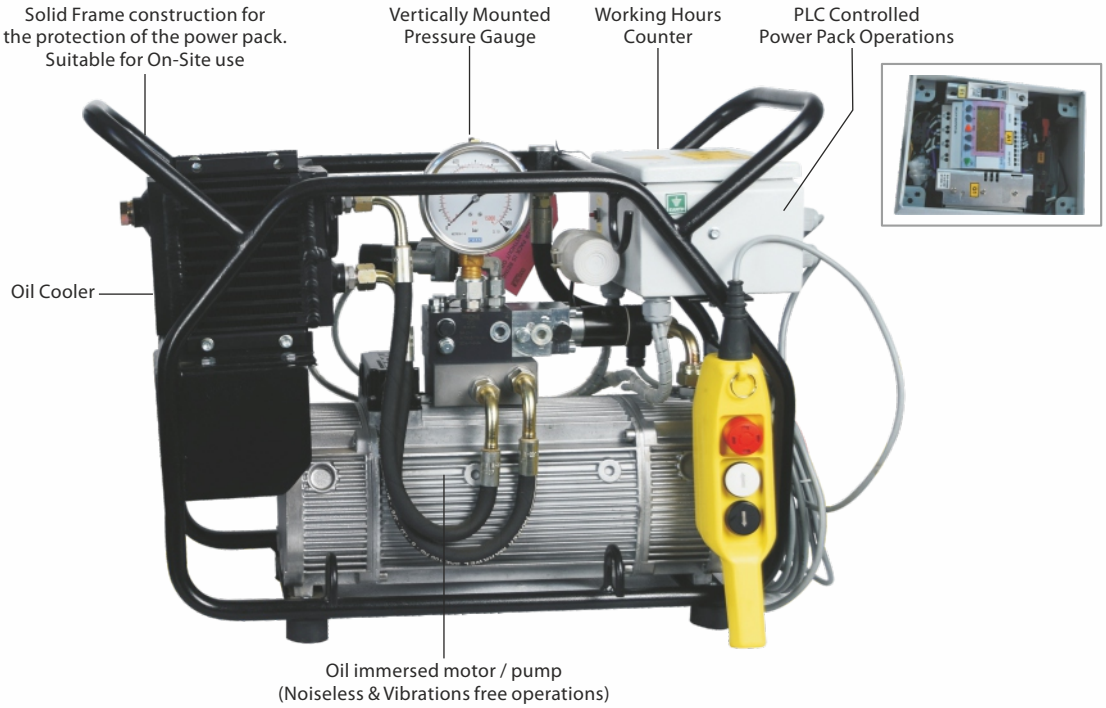

EQUIPPED WITH SAFETY FEATURES

NOTE: Also available as Conventional Electric Power pack Pump will be supplied with Remote Control.

With Auto Cycle

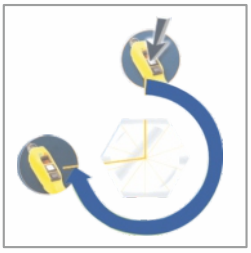

Without Auto Cycle

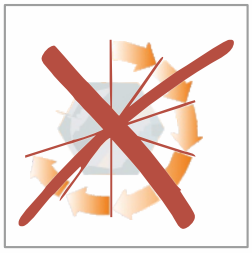

Technical Specification:

Model No.	HPL101
Power Rating	1.5 KW
Maximum Pressure	700Bar / 10,000 PSI
Flow Rate	9.7LPM @ 70Bar 0.97LPM @ 700Bar
Capacity	6 Ltr. / 2 Gallon

ADVANTAGES OF FULL AUTOMATIC TRITORC POWER PACKS

1. Fully Automatic Power Pack

- Faster and reliable in operations.
- High repeatability of the bolting process without pressing the button again and again.

2. Temperature Management

- Built-in heat exchanger to cool the system.
- The unique concept of the high-speed cooling and heat exchanger optimizes cooling for continuous operation.
- Power pack switches off automatically if the temperature rises above 80°C.

3. Oil immersed Motor

- Noiseless and vibration free operations.
- Effective temperature equalization by cooling motor, pump & oil at the same time.

4. PLC Control System

- Reliable control operations of power packs.
- If the power pack remains idle continuously for more than 3 minutes, it will switch off automatically.

HYDRAULIC TORQUEING POWER PACK

Model : TWP-3 | 700 Bar Pneumatic Powered Hydraulic Pump

TWP-3 is a Pneumatic Pump that is both lightweight and portable. The pump is fitted with a CEJN coupling outlet, a glycerin filled damped pressure gauge and an oil sight glass. It also features a fully functional remote control with a 5m cable.

- Double Speed, Single Output Hydraulic System.
- 1000 bar Ø100 mm diameter precision bar / psi gauge.
- Vibration Free Working.
- Protecting against dust filter inside the tank.

Working Pressure	700 bar
Pump Type	Double Speed / Single-Act
Flow at Low Pressure (up to 70 bar)	8.4 ltr
Flow at Medium Pressure (up to 250 bar)	2.5 ltr
Flow at High Pressure (700 bar)	0.9 ltr
Oil Tank Capacity	10.0 ltr
Pressure Gauge	0-1000 bar
Working Noise	82db
Oil Grade	Remote Control (ISO-VG-68)
Dry Weight	30kg
Size (W × L × H)	471 × 467 × 295 mm

ATEX CERTIFIED ELECTRIC PUMP FOR HAZARDOUS ZONES

TRITORC MODEL: PHE-ATEX

FEATURES:

Hydraulic Pump with Three Phase Electric Motor

ATEX Certified Version CE Ex li 2 G K T3

ATEX Zone-2 Class T3 Gas Group IIA

- Three Phase Electric Motor 1.1 kW 440V
- Axial-piston pump mod
- Oil flow 9.4 Litres/min @ 0-70 Bar (2.48 g/min@1015 PSI) and 0.9 Litres/min @ 700 Bar (0.23 g/min@ 10000 PSI)
- 3/2 solenoid valve 24DC and inversion valve
- Pressure regulator on P Line to set the torque value
- Adjustable Relief Valve on return line
- Pressure Gauge DN 100 range 0 -1000 Bar (14500 PSI)
- Reservoir Capacity 10 Litres (2.64 Gallon)
- Recommended Hydraulic Oil ISO 32 and above
- The pump includes remote control and electric box

Also available in
Air Operated Type (PAE - ATEX)

SL SERIES ELECTRIC SHEAR WRENCH

TRITORC SL Series Light Weight and Compact Shear Wrenches provide consistent, reliable torque tightening and shearing to the Tension Control Bolts.

TRITORC Electric Shear Wrenches can achieve Controllable Torque Range of 3685 ft lbs with supported bolt sizes till M36.

All our Shear Wrenches are calibrated and certified.

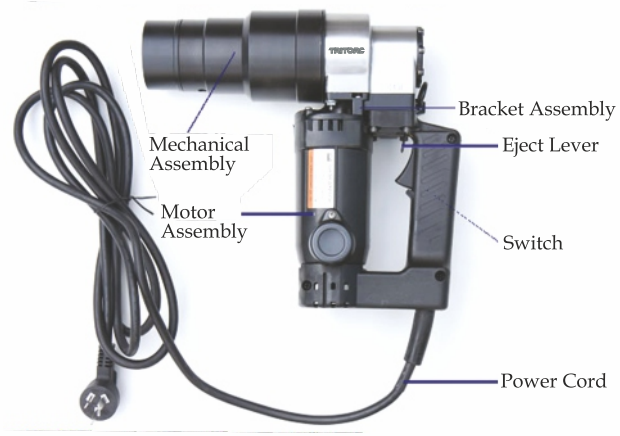

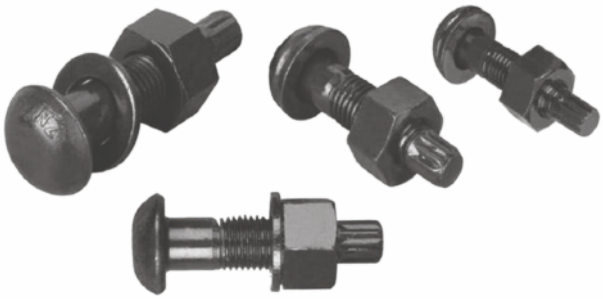

Model No.	Bolt Sizes (mm)	Torque (Nm)	Speed (Rpm)	Weight (Kg)
SL-16	M12, M16	320	36	3.8
SL-20	M12, M16, M20	540	24	6
SL-22	M16, M20, M22	910	20	6.8
SL-24	M20, M22, M24	1200	14	8
SL-27	M22, M24, M27	1700	12	8.3
SL-30	M24, M27, M30	2500	5	10.5
SL-33	M27, M30, M33	3500	4.5	15
SL-36	M30, M33, M36	5000	2.5	17

Note: Dimensions are subject to change.

ET SERIES ELECTRIC TORQUE WRENCH

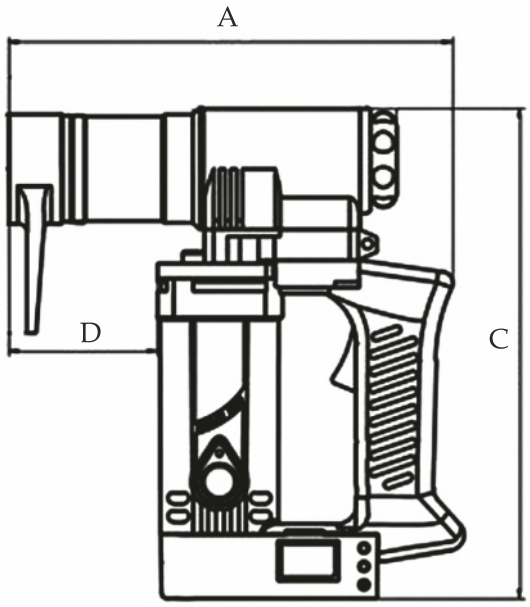

Model	Torque (Nm)	Direct Hex Available	Speed (RPM)	Weight (Kg)	Overall Length A (mm)	Overall Width C	Diameter (D)
ET-3	100-300	M10, M12, M16	28	4	240	267	80
ET-5	200-500	M12, M16, M20	20	4.2	271	267	111
ET-7	300-700	M16, M20, M22	18	4.6	221	269	54
ET-9	400-900	M20, M22, M24	16	5.1	238	275	71
ET-12	500-1200	M22, M24, M27	14	6.3	225	287	50
ET-21	1000-2100	M27, M30, M33	10	7.2	274	286	95
ET-25	1100-2500	M30, M33, M36	5	9	283	293	107
ET-35	1700-3500	M33, M36, M42	4.5	15	283	293	107
ET-60	2000-6000	M42, M45, M48	2.5	18	375	301	273

Model	Torque (Nm)	Speed (RPM)	Weight (Kg)	Square Drive
ES-3	100-300	28	4	3/4"
ES-5	200-500	20	4.2	3/4"
ES-10	300-1000	14	5	1"
ES-12	500-1200	14	6.3	1"
ES-18	500-1800	10	5.5	1"
ES-21	1000-2100	5.5	7.2	1-1/2"
ES-25	1000-2500	5	9	1-1/2"
ES-35	1700-3500	4.5	15	1-1/2"
ES-60	2000-6000	2.5	18	1-1/2"

Note: Dimensions are subject to change as per development of tool.

BATTERY TORQUE WRENCH (TBTW SERIES)

Digital Display

Adjustable Torque from 1N.m to 4000 N.m

Accuracy +/- 5% of reading

Repeated Accuracy ±2%

Battery or cordless Torque Wrenches are portable, convenient, and are used when other power sources are not practical or possible. They are ideal for field service and remote locations. A wide range of capacities and styles are available along with a variety of accessories such as reaction arms, sockets and more.

Type	Square Drive	Torque (Nm)		Speed RPM	Weight Kg	Size A mm	Size B mm	Size C mm	Size D mm
		Min	Max						
TBTW 07	3/4"	230	700	13	3.5	231	63	67	262
TBTW 14	3/4"	300	1400	6	3.5	231	63	67	262
TBTW 20	1"	400	2000	4	4.0	244	63	69	262
TBTW 40	1"	800	4000	2	6.0	285	69	81	266

Note: Dimensions are subject to change.

TOP-SIDE BOLT TENSIONER (BTL SERIES)

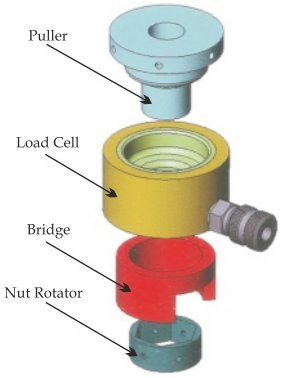

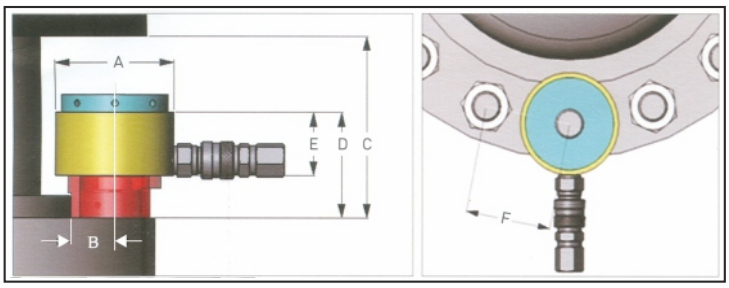

TECHNICAL DATA

Model	Bolt Size		Cylinder	Hyd. Area	Dimension						Weight
					A	B	C	D	E	F	
	Metric	Inch	kN (Ton)	cm² (in²)	mm (in)	mm (in)	mm (in)	mm (in)	mm (in)	mm (in)	kg (lbs)
BTL-3	M16	-	234.2 (23.88)	15.7 (2.43)	75 (2.95)	32.5 (1.27)	168 (6.61)	90 (3.54)	62 (2.44)	47-51 (1.85-2.0)	3 (6.61)
	M18	3/4"									
	M20	-									
	M22	7/8"									
	M24	1									
BTL-5	M27	1-1/8"	498.2 (50.80)	33 (5.11)	102 (4.01)	47 (1.85)	187 (7.36)	106 (4.17)	60 (2.36)	65-71 (2.55-2.79)	5.50 (12.12)
	M30	-									
	M33	1-1/4"									
	M36	1-3/8"									
BTL-9	M39	1-1/2"	896.8 (91.44)	59.7 (9.25)	133 (5.23)	61 (2.40)	208 (8.18)	120 (4.72)	60 (2.36)	86-93 (3.38-3.66)	10 (22.04)
	M42	1-5/8"									
	M45	1-3/4"									
	M48	1-7/8"									
BTL-13	M52	2"	1245.0 (126.8)	83 (12.86)	163 (6.41)	73 (2.87)	231 (9.09)	135 (5.31)	62 (2.44)	106-114 (4.17-4.48)	16 (35.27)
	M56	2-1/4"									
	M60	-									
BTL-19	M64	2-1/2"	1843.3 (187.96)	123 (19.06)	193 (7.59)	86.5 (3.40)	254 (10)	150 (5.90)	62 (2.44)	129-135 (5.07-5.31)	22 (48.50)
	M68	-									
	M72	2-3/4"									
	M76	3"									
BTL-27	M76	3"	2640.5 (269.25)	176 (27.28)	233 (9.17)	110 (4.33)	286 (11.25)	180 (7.08)	73 (2.87)	155-167 (6.10-6.57)	40 (88.18)
	M80	-									
	M85	3-1/4"									
	M90	3-1/2"									
	M95	3-3/4"									
	M100	4"									
BTL-37	M90	3-1/2"	3768.0 (384.22)	251 (38.90)	280 (11.02)	111-121 (4.37-4.76)	304-338 (11.96-13.30)	181-197 (7.12-7.75)	37-40 (1.45-1.57)	175-196 (6.88-7.71)	64 (141.09)
	M95	3-3/4"									
	M100	4"									
	M110	4.1-4′′									
BTL-44	M100	4"	4335.0 (442.04)	289 (44.79)	314 (12.36)	121-140 (4.76-5.51)	310-360 (12.20-14.17)	191-210 (7.51-8.26)	40-44 (1.57-1.73)	192-233 (7.55-9.17)	85 (187.39)
	M110	4.1-2"									
	M120	4.3-4"									
	M125	5′′									
BTL-54	M125	5"	5404.0 (551.05)	360 (55.80)	344 (13.54)	131-161 (5.15-6.33)	354-388 (13.93-15.27)	202-216 (7.95-8.50)	42-47 (1.65-1.85)	243-275 (9.56-10.82)	125 (275.57)
	M130	5-1/4"									
	M140	5-1/2"									
	M150	5-3/4"									

Note: Dimensions are subject to change.

SPRING RETURN HYDRAULIC BOLT TENSIONER
(SLT SERIES)

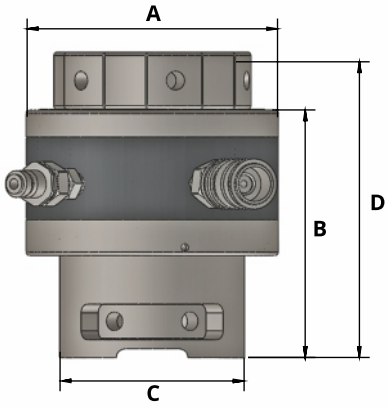

- Working Pressure 1500Bar / 21755 psi
- Special Seal Kit, Piston/Cylinder mis-alignment compensation
- Piston Stroke of SLT 1=8mm, the other model is 10mm.
- Built-in stroke limit valve prevent over stroke.
- Fully enclosed load cell to prevent debris into cylinder.
- Spring return for fast and safe use.

Model	Bolt Size				Max. Load kN (Ton)	Hyd. Area cm² (in²)	A mm (in)	B mm (in)	C mm (in)	Clearance D mm (in)	Weight kg (lbs)
	Imperial		Metric								
SLT1	3/4″	SLT1-1	M20	SLT1-3	160 (16.31)	10.67 (1.65)	66 (2.59)	93 (3.66)	63 (2.48)	136 (5.35)	1.4 (3.08)
	7/8″	SLT1-2	M22	SLT1-4							
SLT2	1″	SLT2-1	M24	SLT2-3	280 (28.55)	18.67 (2.89)	87 (3.42)	117 (4.60)	68 (2.67)	175 (6.88)	2.7 (5.95)
	1-1/8″	SLT2-2	M27	SLT2-4							
SLT3	1″	SLT3-1	M24	SLT3-5	450 (45.88)	30.01 (4.65)	103 (4.05)	117 (4.60)	75 (2.95)	175 (6.88)	4.1 (9.03)
			M27	SLT3-6							
	1-1/8″	SLT3-2	M30	SLT3-7				120 (4.72)	80 (3.14)	181 (7.12)	
	1-1/4″	SLT3-3	M33	SLT3-8				123 (4.84)	84 (3.30)	188 (7.40)	
	1-3/8″	SLT3-4	M36	SLT3-9				126 (4.96)	89 (3.50)	195 (7.67)	
SLT4	1-1/4″	SLT4-1	M33	SLT4-5	660 (67.30)	44.01 (6.82)	118 (4.64)	123 (4.84)	88 (3.46)	190 (7.48)	5.4 (11.9)
	1-3/8″	SLT4-2	M36	SLT4-6				126 (4.96)	96 (6.77)	197 (7.75)	
	1-1/2″	SLT4-3	M39	SLT4-7				130 (8.11)	96 (3.77)	203 (7.99)	
	1-5/8″	SLT4-4	M42	SLT4-8				133 (5.23)	105 (4.13)	209 (8.22)	
SLT5	1-1/2″	SLT5-1	M39	SLT5-6	1000 (101.97)	66.68 (10.33)	140.5 (5.53)	132 (5.19)	112 (4.40)	211 (8.30)	8.4 (18.51)
	1-5/8″	SLT5-2	M42	SLT5-7				135 (5.31)	114 (4.48)	217 (8.54)	
	1-3/4″	SLT5-3	M45	SLT5-8				139 (5.47)	118 (4.64)	223 (8.77)	
	1-7/8″	SLT5-4	M48	SLT5-9				142 (5.59)	114 (4.48)	230 (9.05)	
	2″	SLT5-5						145 (5.70)	120 (4.72)	236 (9.29)	
SLT6	2″	SLT6-1	M52	SLT6-5	1500 (152.95)	100.03 (15.50)	175.5 (6.90)	148 (5.82)	120 (4.72)	246 (6.68)	13.8 (30.42)
	2-1/4″	SLT6-1	M56	SLT6-6				154 (6.06)	138 (5.43)	259 (10.19)	
			M60	SLT6-7				161 (6.33)	138 (5.43)	259 (10.19)	
	2-1/2″	SLT6-3	M64	SLT6-8				161 (6.33)	153 (6.02)	272 (10.70)	
	2-3/4″	SLT6-4	M68	SLT6-9				167 (6.57)	156 (6.14)	284 (11.18)	
SLT7	2-3/4″	SLT7-1	M72	SLT7-5	2500 (254.92)	166.71 (25.84)	219 (8.62)	167 (6.57)	157 (6.18)	294 (11.57)	23 (50.70)
	3″	SLT7-2	M76	SLT7-6				171 (6.73)	158 (6.22)	307 (12.08)	
			M80	SLT7-7				180 (7.08)	190 (7.48)	310 (12.20)	
	3-1/4″	SLT7-3	M85	SLT7-8				180 (7.08)	190 (7.48)	320 (12.59)	
	3-1/2″	SLT7-4	M90	SLT7-9				186 (7.32)	205 (8.07)	332 (13.07)	
SLT8	3-1/2″	SLT8-1	M90	SLT8-4	3200 (326.30)	213.39 (33.07)	252 (9.92)	186 (7.32)	200 (7.87)	339 (13.34)	32 (70.54)
			M95	SLT8-5				186 (7.32)	200 (7.87)	346 (13.62)	
	3-3/4″	SLT8-2	M100	SLT8-6				192 (7.55)	200 (7.87)	352 (13.85)	
	4″	SLT8-3						199 (7.83)	210 (8.26)	364 (14.33)	

Note: Dimensions are subject to change.

MULTI-STAGE HYDRAULIC BOLT TENSIONER (MST SERIES)

Multi-Stage Tensioners are slim tensioners suited for constricted space operations. These tensioners benefit from the combined tensioning force of multiple cylinders to achieve desired results in a smaller diameter.

- Working Pressure 1500Bar / 21755 psi.
- Fast, simple, accurate, reliable and ideal tightening and bolting tool for wind turbine.
- Small, compact, can impart large tensioning load.
- Durable composite material seal kit.
- Clear over stroke alarming mark.
- Optional gear drive allows the user rotate the nut quickly.
- Optional cycle counter available.

Automatic Piston Return: The integrated automatic piston return mechanism pushes the piston back to its end position when hydraulic pressure is released. This greatly increases tensioning speed.

Sturdy Gearbox for Rundown of Sockets: The Heavy gearbox drives the nut rotator. This ensures that the nut can be turned easily with a hand ratchet.

TECHNICAL DATA OF VARIANTS:

Model	Bolt Diameter		Min. Length of Thread (mm)	Max. Length of Thread (mm)	Working Stroke (mm)	Bolt Distance (mm)	Max. Load (KN)	Outside Diameter (mm)	Min.Height (mm)
	(mm)	(in)							
MST-M30	M30	1-1/8	62	69	7	66	464	73	276
MST-M33	M33	1-1/4	66	73	9	72	583	78	295
MST-M36	M36	1-3/8	75	82	9	77	677	84	326
MST-M39	M39	1-1/2	78	88	10	83	805	90	360
MST-M42	M42	1-5/8	83	91	10	89	926	96	357
MST-M45	M45	1-3/4	87	96	10	96	1091	105	371
MST-M48	M48	1-7/8	93	102	10	102	1231	110	387

Note: Dimensions are subject to change. Customised solutions are provided as per requirement as well.

SUB-SEA HYDRAULIC BOLT TENSIONER

TRITORC Subsea Bolt Tensioners are manufactured to suit the demanding requirements for divers working in harsh subsea environments. We provide a complete range of Subsea Tensioners which incorporate the Split Reaction Nut that allows the diver to save time and ensure the fastest possible reaction nut engagement.

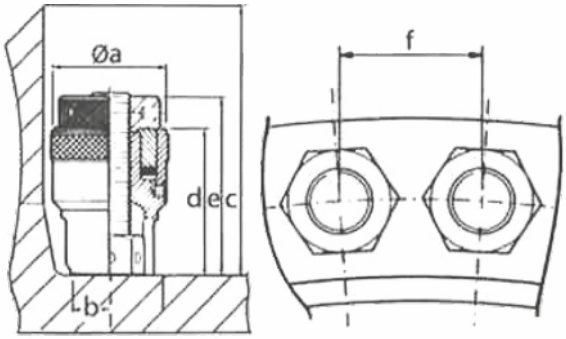

FEATURES:

- Cover full range of bolt sizes from 1" to 3.1/2"
- Work load of up to 253 Tonnage Force

WIND TURBINE FOUNDATION BOLT TENSIONER (WBT SERIES)

To meet electrical generation requirements, Wind Turbines must be installed quickly. This process requires a tool that can be relied upon repeatedly to maintain a strong foundation for the wind turbine.

Features:

- Custom Built Tools with Synchronized Tensioner Operation.
- An auto retract mechanism makes installation faster.
- High Tensioning Force available for various thread profiles and a wide range of bolt sizes.
- Compatible with Electrical, Pneumatic and Manually Operated Power Packs.

AIR OPERATED
HYDRAULIC POWER PACK FOR TENSIONERS

The Air Operated Pumps are designed to incorporate safe, reliable and simple operation.

- Consumption of Free Air 800 Litres per minute (28 Standard cubic feet per minute)
- Air Pressure Required 4 - 7 Bar (60 - 100 psi)
- Finish Pressure Gauge Dual Scale 0 - 2000 Bar (0-29000 psi)
- Working Pressure 1500 Bar

Model: BPL-100

Flow	0.5LPM
Air Consumption	28 - 100cfm
Maximum Outlet Pressure	2300 Bar (33350 PSI)
Maximum Air Pressure	7 Bar/100 PSI
Pressure Ratio	1:300

HAND PUMPS FOR BOLT TENSIONERS
MODEL: BPL-15

TRITORC Two-Stage Hand Pumps come with Standard Pressure Gauges. This gives the user precise and safe control over the work carried out. The gauge is directly mounted onto the pump and is well protected by the specially designed pump lever.

FEATURES:

- Return connections on all pumps
- Easy and simple maintenance
- Robust design
- Aluminum Tank

Oil Tank Capacity	2000 (122.1)cm² (in³)
Usable Oil Capacity	1700 (103.7)cm² (in³)
Volume per Stroke	High - 0.8cm²/mm Low - 20cm²/mm
Piston Stroke	26 mm
Max. Working Pressure	1800 kg/cm²
Max. Handle Effort	33.9 kg (74.74 lb)
Weight	7.7 kg (16.98 lb)

MANUAL TORQUE WRENCHES

TRITORC Click Type Torque Wrenches are an innovative design concept, providing consistently accurate readings and trouble-free performance. Our Torque Wrenches have a proven performance record.

Model No.		Torque Wrenches				Square Drive	Overall Length	Unit Weight
Non-Ratcheting	Ratcheting	Nm	Kgf.m	Lbf.in	Lb.ft	Inches	mm	kg.
TVT-100A	TVTR-100A	2.5-11	0.3-1.1	20-100	2-8	3/8"	320/360	0.56
TVT-300A	TVTR-300R	5-35	0.5-3.5	40-300	4-25	3/8"	430/465	0.75
TVT-600A	TVTR-600R	12-68	1.2-7	100-600	10-50	1/2"	485/530	1.10
TVT-1200A	TVTR-1200A	25-135	3-14	200-1200	20-100	1/2"	545/595	2.0
TVT-2000A	TVTR-2000A	50-225	5-23	400-2000	40-160	1/2"	610/660	2.49
TVT-3000A	TVTR-3000A	70 - 330	7-35	600-3000	50 - 250	1/2"	835/890	4.0
TVT-5000A	TVTR-5000A	140 - 560	14-57	1200-5000	100-410	3/4"	1120/1195	6.58
TVT-8400A	TVTR-8400A	480 - 940	49-95	4200-8400	350-700	3/4"	1400/1485	12.7
NT-14	NT-14/R	135-540	14-56	1200-4800	100-400	3/4"	1120/1195	6.5
NT-14S	NT-14S/R	135-780	14-78	1200-6640	100-500	3/4"	1110/1195	7.0
NT-49	NT-49/R	475-1050	49-105	4200-9300	350-750	3/4"	1390/1480	15.0
NT-55	NT-55/R	540-1380	55-140	4800-12250	400-1000	1"	1305/1340	18.0
NT-105	NT-105/R	1015-1900	105-195	8800-16820	750-1400	1"	1305/1340	18.0
NT-170	NT-170/R	1350-2700	135-275	11950-24000	1000-2000	1"	1450/1530	20.60

Note: Dimensions are subject to change.

MANUAL TORQUE MULTIPLIER

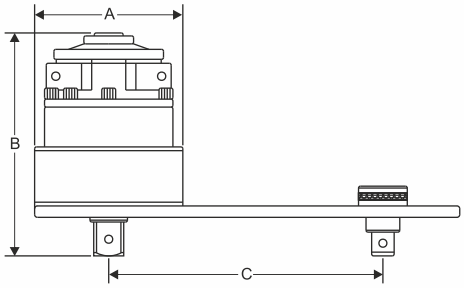

Model	Max Output Torque			Estimated Bolt Capacity		Multip-lication Factor	Input Square	Output Square	Major Dia A	Depth B	Min C	Max C	Recommended Torque Wrench	Approx Weight
	Ft.lbs	Nm	Kgf.m.	inch	mm		inch	inch	mm	mm	mm	mm	No.	Kg
AM-1	1250	1700	170	1.1/8	27	5	1/2"	3/4"	127	105	85	217	TVT-3000A	5
AM-2	1250	1700	170	1.1/8	27	5	3/4"	1	127	125	85	217	TVT-3000A	5.5
AM-2/25	1250	1700	1170	1.1/8	27	25	1/2"	1	124	155	85	217	TVT-600A	8.5
AM-5	2000	2700	275	1.3/8	36	5	3/4"	1	129	140	100	260	TVT-5000A	7.5
AM-5/25	2000	2700	275	1.3/8	36	25	1/2"	1	140	186	100	260	TVT-1200A	12.5
AM-6	2500	3400	345	1.1/2	38	5	3/4"	1.1/2"	150	155	102	260	TVT-8400A	10
AM-6/25	2500	3400	345	1.1/2	38	25	1/2"	1.1/2"	140	208	100	260	TVT-1200A	14
AM-7	4500	6000	622	1.7/8	48	5	3/4"	1.1/2"	166	163	122	310	NT-55	14
AM-7/25	4500	6000	622	1.7/8	48	25	1/2"	1.1/2"	166	250	122	310	NT-55	22
AM-9/25	7000	9500	965	2.1/4	56	25	3/4"	1.1/2"	207	260	150	350	TVT-5000A	31
AM-9/125	7000	9500	965	2.1/4	56	125	1/2"	1.1/2"	207	301	150	350	NT 14/S	35
AM-11/25	12500	17000	1735	3.3/4	95	25	3/4"	2.1/2"	258	325	180	480	NT 14/S	60
AM-11/125	12500	17000	1735	3.3/4	95	125	1/2"	2.1/2"	258	400	180	480	TVT-2000A	75
AM-13/125	35000	47500	4845	4.1/2	115	125	3/4"	2.1/2"	315	550	180	480	NT-14/R	100

AWUR-Anti Wind Up Ratchet

Note: Dimensions are subject to change.

TRITORC FLANGE SPREADERS HYDRAULIC VERTICAL LIFTING WEDGE (HVWL-10)

TRITORC Hydraulic Vertical Lifting Wedge HVWL-10 has been developed as an easy to use and a cost-effective way to find solutions to heavy lifting where minimum clearance is available. It will lift objects vertically where an access gap of 3/8" (9.5mm) or more is available. The HVWL-10 will lift an object fast, with a secure lifting force of 16 Tons per tool.

FEATURES

- Access gap of only 3/8" (9.5mm) needed.
- 3/4" (19.0mm) of vertical lift available from each step
- Max. height of 50mm on 4th step
- Automatic spring return retraction
- Interlocking first step ensures safe hold
- No slippage due to locking
- Will lift in a straight vertical place

KIT OPTIONS:

MINI KIT:

- 1 x Hydraulic Vertical Lifting Wedge Assembly
- 1 x Safety Block
- 1 x Stepped Block
- 1 x Instruction Manual

STANDARD KIT:

- 1 x Hydraulic Vertical Lifting Wedge Assembly
- 1 x 10,000 psi (700 Bar) Two Stage Hydraulic Hand Pump
- 1 x 10,000 psi (700 Bar) Hydraulic Hose Length 6 feet
- 1 x Safety Block
- 1 x Stepped Block
- 1 x Instruction Manual
- 1 x Carry Case

HYDRAULIC SPREADING WEDGE (HSWL-10)

The Spreading Wedge has been developed as the simple cost effective solution for flange speading

FEATURES

- Only requires an access gap 1/4" (6mm)
- Robust light weight tool-just 7.2 kg (16 lbs)
- 10,000 psi (700 Bar) generates 14.0 Tons spreading force
- Automatic Spring Return
- Locking at first step ensures on slippage increased safely

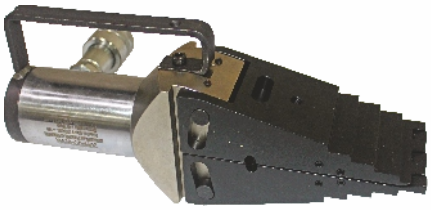

KIT OPTIONS:

MINI KIT:

- 1 x Hydraulic Spreading Wedge Assembly
- 1 x Safety Block
- 1 x Instruction Manual
- 1 x Carry Case

STEPPED BLOCK ACCESSORY:

- 2 x Safety Block
- 2 x CSK M6 x 12mm
- Countersunk Screws

STANDARD KIT:

- 1 x Hydraulic Spreading Wedge Assembly
- 1 x 10,000 psi (700 Bar) Two Stage Hydraulic Hand Pump
- 1 x 10,000 psi (700 Bar) Hydraulic Hose
- 1 x Safety Block
- 1 x Instruction Manual
- 1 x Carry Case
- Gross Weight: 17 kg.

MAXI KIT:

- 2 x Hydraulic Spreading Wedge Assembly
- 1 x 10,000 psi (700 Bar) Two Stage Hydraulic Hand Pump
- 2 x 10,000 psi (700 Bar) Hydraulic Hoses
- 2 x Safety Block
- 1 x Instruction Manual
- 1 x Carry Case
- 1 x 10,000 psi Twin Valve Manifold
- Gross Weight: 28kg.

TRITORC LIGHT WEIGHT NUT SPLITTER

TRITORC Lightweight Hydraulic Nut Splitters are used in applications that involve corroding of a nut. It can be used to remove corroded or seized nuts quickly and safely. The lightweight option helps the user to apply the tool to the lower sized bolts.

TRITORC offers Lightweight Hydraulic Nut Splitters for a range of Hex sizes from 0.37 to 2.95 inches. Our product is designed for operator comfort that fits tight spaces, and it cuts through the hardest of nuts.

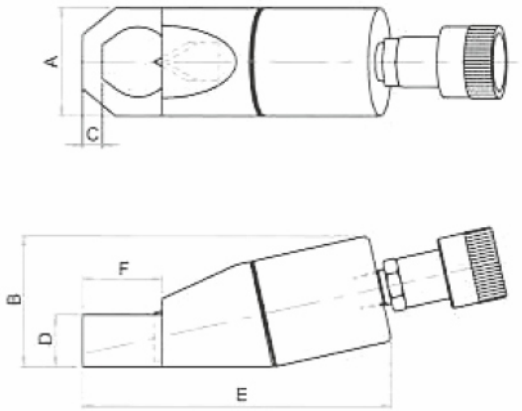

Model STANDARD	Hex Size in (mm)	Thread Size in(mm)	A in(mm)	B in(mm)	C in(mm)	D in(mm)	E in(mm)	F in(mm)	Weight lbs(kg)	Replacement Chisel Model Nos.
NSL-5	0.37″-0.75″ (10-19)	M6-M12	1.57″ (40)	2.04″ (52)	0.31″ (8)	0.79″ (20)	5.11″ (130)	1.18″ (30)	2 (1)	TNSC - 5
NSL-10	0.75″-0.94″ (19-24)	M12-M16	2.12″ (54)	2.64″ (67)	0.47″ (12)	0.94″ (24)	6.41″ (163)	1.41″ (41)	4 (2)	TNSC - 10
NSL-15	0.94″-1.26″ (24-32)	M16-M22	2.52″ (64)	3.11″ (79)	0.51″ (13)	1.18″ (30)	7.36″ (187)	2.04″ (52)	6 (3)	TNSC - 15
NSL-20	1.26″-1.61″ (32-41)	M22-M27	3.07″ (78)	3.70″ (94)	0.78″ (20)	1.46″ (37)	8.62″ (219)	2.72″ (69)	10 (4.5)	TNSC - 20
NSL-35	1.61″-1.97″ (41-50)	M27-M33	3.74″ (95)	4.45″ (113)	0.83″ (21)	1.77″ (45)	10.43″ (265)	3.07″ (78)	21 (9.6)	TNSC - 35
NSL-50	1.97″-2.36″ (50-60)	M33-M39	4.17″ (106)	5.04″ (128)	0.98″ (25)	2.12″ (54)	11.69″ (297)	3.58″ (91)	29 (13)	TNSC - 50
NSL-90	2.36″-2.95″ (60-75)	M39-M48	6.14″ (156)	7.28″ (185)	1.06″ (27)	2.95″ (75)	14.05″ (357)	4.33″ (110)	75 (34)	TNSC - 90

Higher capacity and customized solutions are available on request.
Specifications are subject to change.

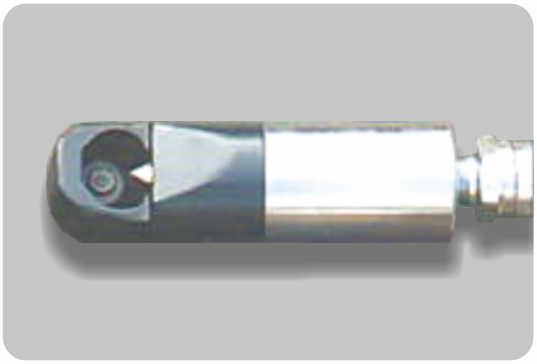

APPLICATION:

- Access gap of only 3/8" (9.5mm) needed.
- 3/4" (19.0mm) of vertical lift available from each step
- Max. height of 50mm on 4th step
- Automatic spring return retraction
- Interlocking first step ensures safe hold
- No slippage due to locking
- Will lift in a straight vertical place

TRITORC
PIPELINE SOLUTIONS

Nominal Size		Flange Size																	
		150			300			600			900			1500			2500		
Inches	Metric	No. of Bolts	Bolt dia inches	Bolt dia mm	No. of Bolts	Bolt dia inches	Bolt dia mm	No. of Bolts	Bolt dia inches	Bolt dia mm	No. of Bolts	Bolt dia inches	Bolt dia mm	No. of Bolts	Bolt dia inches	Bolt dia mm	No. of Bolts	Bolt dia inches	Bolt dia mm
1/2	15	4	1/2	14	4	1/2	14	4	1/2	14	4	3/4	20	4	3/4	20	4	3/4	20
3/4	20	4	1/2	14	4	5/8	16	4	5/8	16	4	3/4	20	4	3/4	20	4	3/4	20
1	25	4	1/2	14	4	5/8	16	4	5/8	16	4	7/8	24	4	7/8	24	4	7/8	24
1.1/4	32	4	1/2	14	4	5/8	16	4	5/8	16	4	7/8	24	4	7/8	24	4	1	27
1.1/2	40	4	1/2	14	4	3/4	20	4	3/4	20	4	1	27	4	1	27	4	1.1/8	30
2	50	4	5/8	16	8	5/8	16	8	5/8	20	8	7/8	24	8	7/8	24	8	1	27
2.1/2	65	4	5/8	16	8	3/4	20	8	3/4	20	8	1	27	8	1	27	8	1.1/8	30
3	80	4	5/8	16	8	3/4	20	8	3/4	20	8	7/8	24	8	1.1/8	30	8	1.1/4	33
3.1/2	90	8	5/8	20	8	3/4	20	8	7/8	22	–	-	-	-	-	-	-	-	-
4	100	8	5/8	20	8	3/4	20	8	7/8	24	8	1.1/8	30	8	1.1/4	33	8	1.1/2	39
5	125	8	3/4	20	6	3/4	20	8	1	27	8	1.1/4	33	8	1.1/2	39	8	1.3/4	45
6	150	8	3/4	20	12	3/4	24	12	1	27	12	1.1/8	30	12	1.3/8	36	8	2	52
8	200	8	3/4	24	12	7/8	27	12	1.1/8	30	12	1.3/8	36	12	1.5/8	42	12	2	52
10	250	12	7/8	24	16	1	30	16	1.1/4	33	16	1.3/8	35	12	1.7/8	48	12	2.1/2	64
12	300	12	7/8	27	16	1.1/8	30	20	1.1/4	33	20	1.3/8	36	12	2	52	12	2.3/4	70
14	350	12	1	27	20	1.1/8	33	20	1.3/8	36	20	1.1/2	39	16	2.1/4	56			
16	400	16	1	30	20	1.1/4	33	20	1.1/2	39	20	1.5/8	42	16	2.1/2	54			
18	450	16	1.1/8	30	24	1.1/4	33	20	1.5/8	42	20	1.7/8	48	16	2.3/4	70			
20	500	20	1.1/8	33	24	1.1/4	33	24	1.5/8	42	20	2	52	16	3	76			
24	600	20	1.1/4	33	24	1.1/2	42	24	1.7/8	48	20	2.1/2	64	16	3.1/2	90			
26	650	24	1.1/2	33	28	1.1/4	42	24	1.3/4	48	20	2.3/4	70						
28	700	28	1.1/2	33	28	1.1/2	45	28	2	52	16	3	76						
30	750	28	1.1/2	33	28	1.3/4	40	28	2	52	20	3	76						
32	800	28	1.1/2	39	28	1.1/4	48	28	2.1/2	56	20	3.1/2	85						
34	850	32	1.1/2	39	28	1.1/2	48	28	2.1/2	56	20	3.1/2	90						
36	900	32	1.1/2	39	32	2	52	28	2.1/2	64	20	3.1/2	90						

TORQUE SPECIFICATIONS

Bolt Size	A/F	Bolt Grade: 8.8				Bolt Grade: 10.9				Bolt Grade: 12.9				Bolt Size	A/F	Bolt Grade: B7/B16			
		Torque Values (Nm)			Tension (KN)	Torque Values (Nm)			Tension (KN)	Torque Values (Nm)			Tension (KN)			Torque Values (Nm)			Tension (KN)
		μ=0.10	μ=0.15	μ=0.2		μ=0.10	μ=0.15	μ=0.2		μ=0.10	μ=0.15	μ=0.2				μ=0.10	μ=0.15	μ=0.2	
M16	24	121	165	208	54	171	232	292	76	205	278	351	91	5/8"	1.1/16"	126	171	215	57
M18	27	165	224	283	66	233	316	399	92	279	379	478	111	-	-	-	-	-	-
M20	30	237	322	406	85	333	452	571	119	400	543	685	143	3/4"	1.1/4"	226	306	387	85
M22	32	327	443	560	106	459	623	787	149	551	748	945	179	7/8"	1.7/16"	366	496	627	117
M24	36	409	556	702	122	576	781	987	171	691	938	1184	206	-	-	-	-	-	-
M27	41	608	828	1043	161	855	1161	1467	226	1027	1393	1760	272	1"	1.5/8"	549	745	941	154
M30	46	820	1113	1406	195	1154	1566	1978	275	1384	1879	2373	330	1.1/8"	1.13/16"	816	1107	1398	204
M33	50	1128	1531	1933	244	1586	2152	2719	343	1903	2583	3263	412	1.1/4"	2"	1157	1570	1983	260
M36	55	1442	1957	2472	286	2028	2752	3476	402	2433	3302	4171	483	1.3/8"	2.3/16"	1582	2147	2712	324
M39	60	1881	2553	3225	345	2646	3590	4535	485	3175	4308	5442	581	1.1/2"	2.3/8"	2100	2850	3600	394
M42	65	2317	3145	2973	394	3259	4423	5587	554	3911	5307	6704	665	1.5/8"	2.9/16"	2720	3692	4663	471
M45	70	2912	3952	4992	462	4095	5558	7021	650	4914	6670	8425	780	1.3/4"	2.3/4"	3452	4685	5917	555
M48	75	3490	4737	5984	519	4909	6662	8415	730	5890	7994	10097	877	1.7/8"	2.15/16"	4304	5841	7378	645
M52	80	4545	6169	7792	624	6392	8675	10958	878	7670	10410	13149	1054	2"	3.1/8"	5285	7173	9060	743
M56	85	5642	7658	9673	720	7935	10768	13602	1012	9522	12922	16323	1214	2.1/4"	3.1/2"	7674	10414	13155	959
M60	90	7076	9603	12130	842	9951	13504	17058	1185	11941	16205	20470	1422	-	-	-	-	-	-
M64	95	8535	11583	14631	953	12002	16289	20575	1340	14403	19547	24690	1607	2.1/2"	3.7/8"	10691	14509	18327	1203
M68	100	10405	14121	17838	1093	14632	19858	25084	1537	17559	23830	30101	1844	2.3/4"	4.1/4"	13038	17694	22350	1333
M72	105	12530	17005	21480	1243	17620	23913	30206	1748	-	-	-	-	-	-	-	-	-	-
M76	110	14926	20256	25587	1403	20989	28485	35981	1973	-	-	-	-	-	-	-	-	-	-
M80	115	17608	30185	1572	1572	-	-	-	-	-	-	-	-	3"	4.5/8"	17104	23213	29321	1603
M85	120	21390	29029	36668	1797	-	-	-	-	-	-	-	-	-	-	-	-	-	-
M90	130	25676	34847	44017	2038	-	-	-	-	-	-	-	-	3.1/4"	5"	21938	29774	37609	1898
M95	135	30500	41393	52286	2293	-	-	-	-	-	-	-	-	3.1/2"	5.3/8"	27607	37467	47326	2218
M100	145	35893	48712	61531	2564	-	-	-	-	-	-	-	-	3.3/4"	5.3/4"	34176	46382	58588	2563
M105	150	41886	56846	71805	2849	-	-	-	-	-	-	-	-	4"	6.1/8"	41712	56610	71507	2933
M110	155	48511	65837	83162	3150	-	-	-	-	-	-	-	-	-	-	-	-	-	-

μ=0.10 - Lubricated Bolts
μ=0.15 - Semi Lubricated Bolts
μ=0.2 - Dry Bolts

Newton - Meter Nm to Foot-Pounds 1df. ft. (1Nm = 0.738 1bf. ft.)
Kilogram - Force Meter to Newton - Meter (1Kgm = 9.80 Nm)

TRITORC
PIPELINE SOLUTIONS

TRITORC

PIPELINE SOLUTIONS

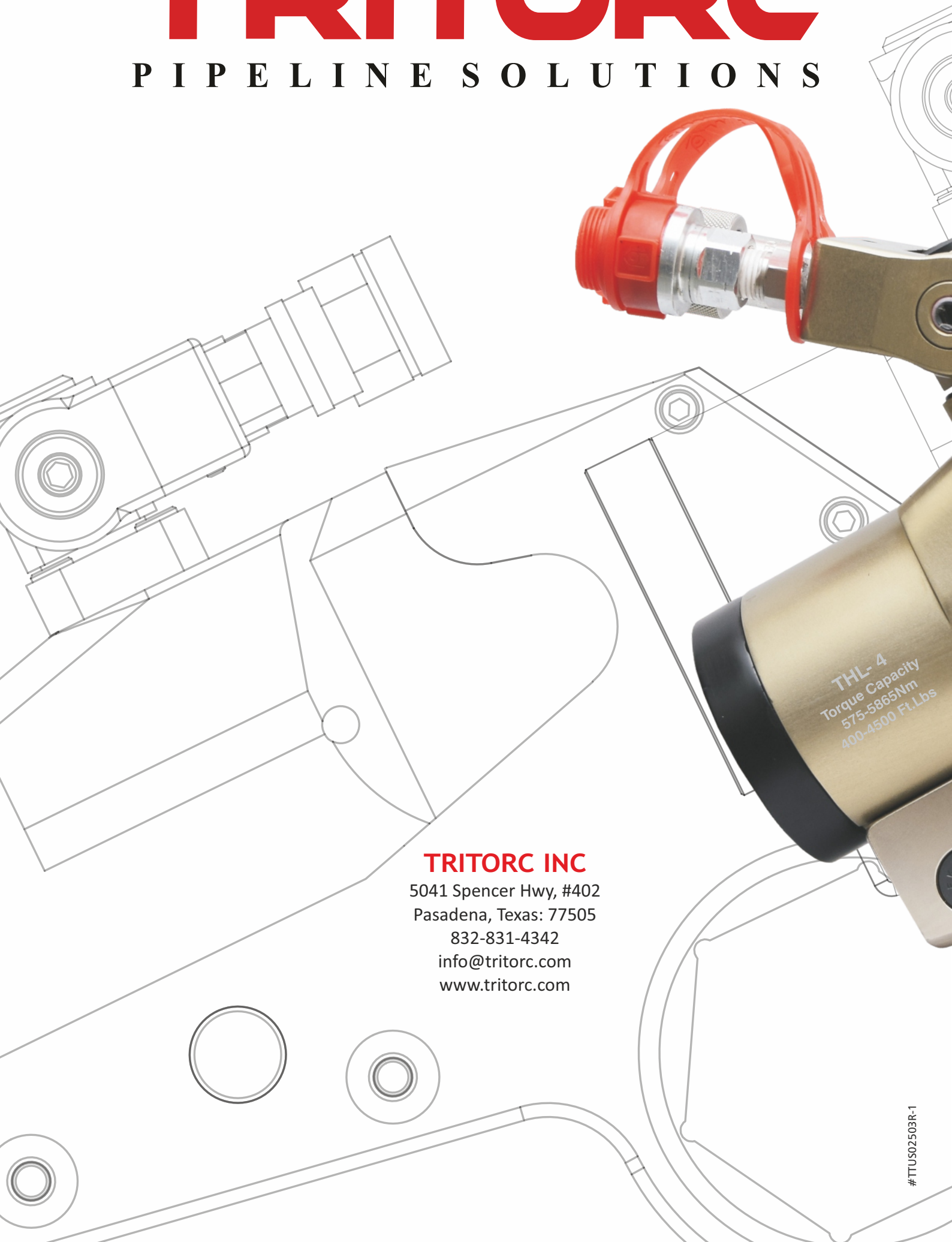

TRITORC INC
5041 Spencer Hwy, #402
Pasadena, Texas: 77505
832-831-4342
info@tritorc.com
www.tritorc.com

#TTUS02503R-1